ISC0100 CYBERELECTRONICS

Fall 2018

The 4th lecture

Martin Jaanus U02-308
martin.jaanus@ttu.ee 620 2110, 56 91 31 93

Learning environment : http://isc.ttu.ee
Materials : http://isc.ttu.ee/martin

Topics

Devices

1. Diodes, transisors
2. Amplifiers, feedback
3. Operational amplifier

Semiconductors

- Low electric conductivity at room temperature
- Conductivity increases with temperature.
- Metalloids Ge, Si ,Se
- Some oxides and alloys
- Conductivity can be changed by adding doping

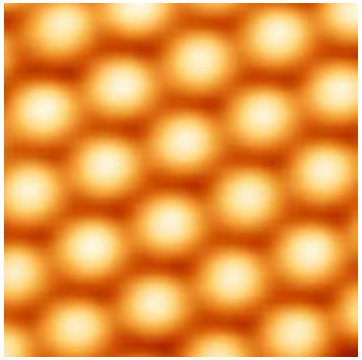

Silicon atoms 45,000,000 x.magnification -wikipedia

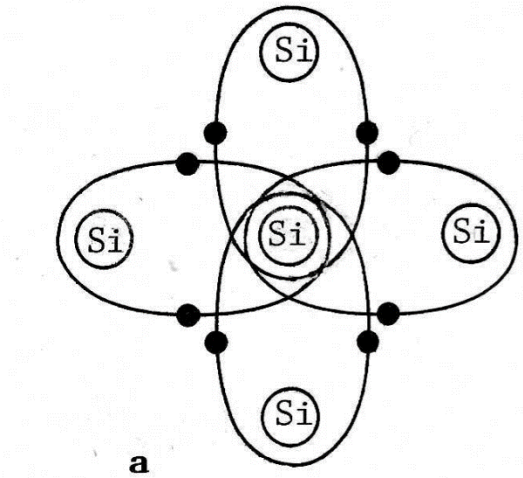

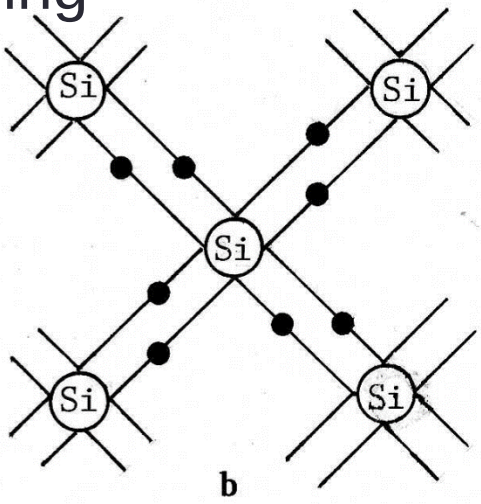

N ja P types of semiconductors

- In clean semiconductor equals number of free electrons with number od holes. Doping greatly increases the number of charge carriers within the crystal.
- When a doped semiconductor contains mostly free holes it is called "p-type", and when it contains mostly free electrons it is known as "n-type"

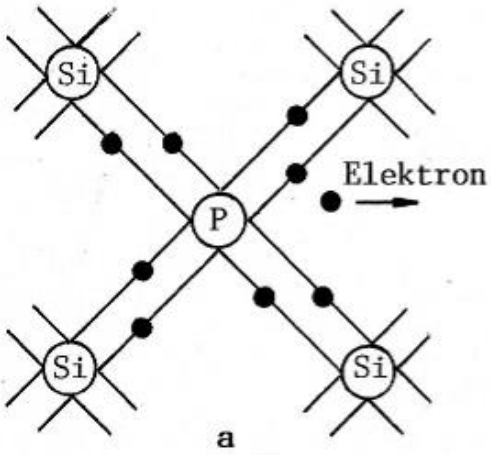

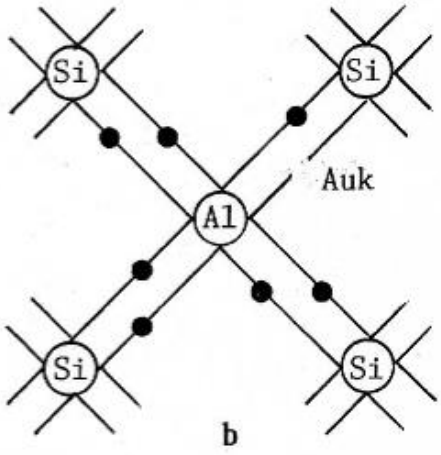

N type (added phosphorus)

P type (added aluminium)

p-n junction

- p–n junctions are elementary "building blocks" of semiconductor electronic devices such as diodes, transistors, solar cells, LEDs, and integrated circuits
- A p–n junction is a boundary or interface between two types of semiconductor materials, p-type and n-type, inside a single crystal of semiconductor.
- The "p" (positive) side contains an excess of holes, while the "n" (negative) side contains an excess of electrons in the outer shells of the electrically neutral atoms there.

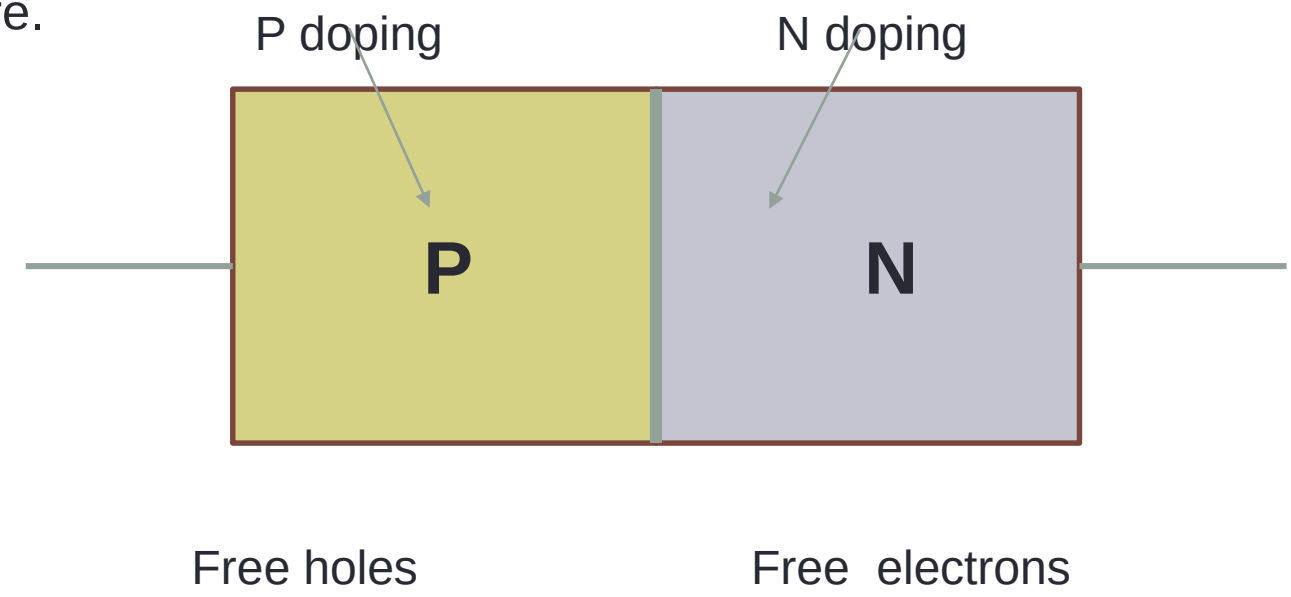

Unbiased p-n junction

- In P side is because of fewness of electrons positive charge
- In N side is because of plentyness of electrons negative charge.
- Positive and negative charges will separate and cause barrier voltage (in Si about 0,6...0,7 V)

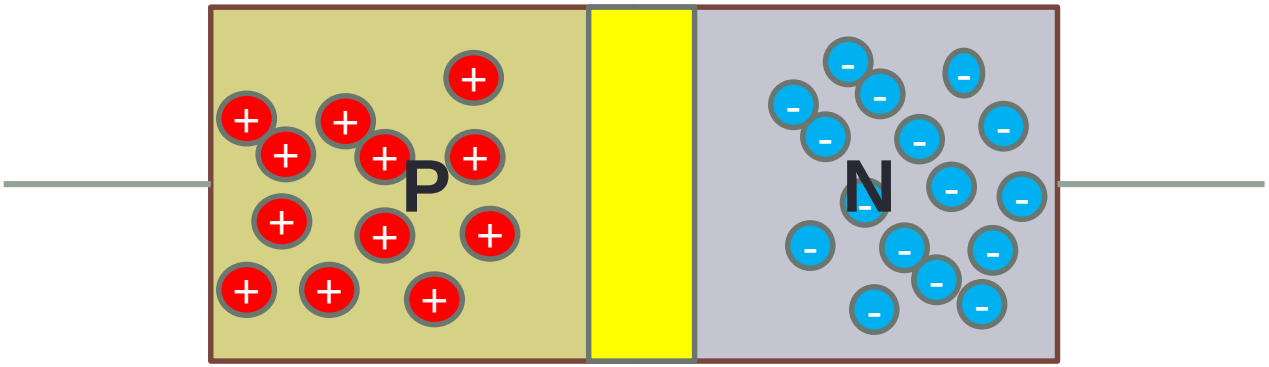

Free holes

Free electrons

Reverse biased p-n junction

- Charges are pulled to edges of layers .
- Barrier layer increases.
- Electric current is missing.

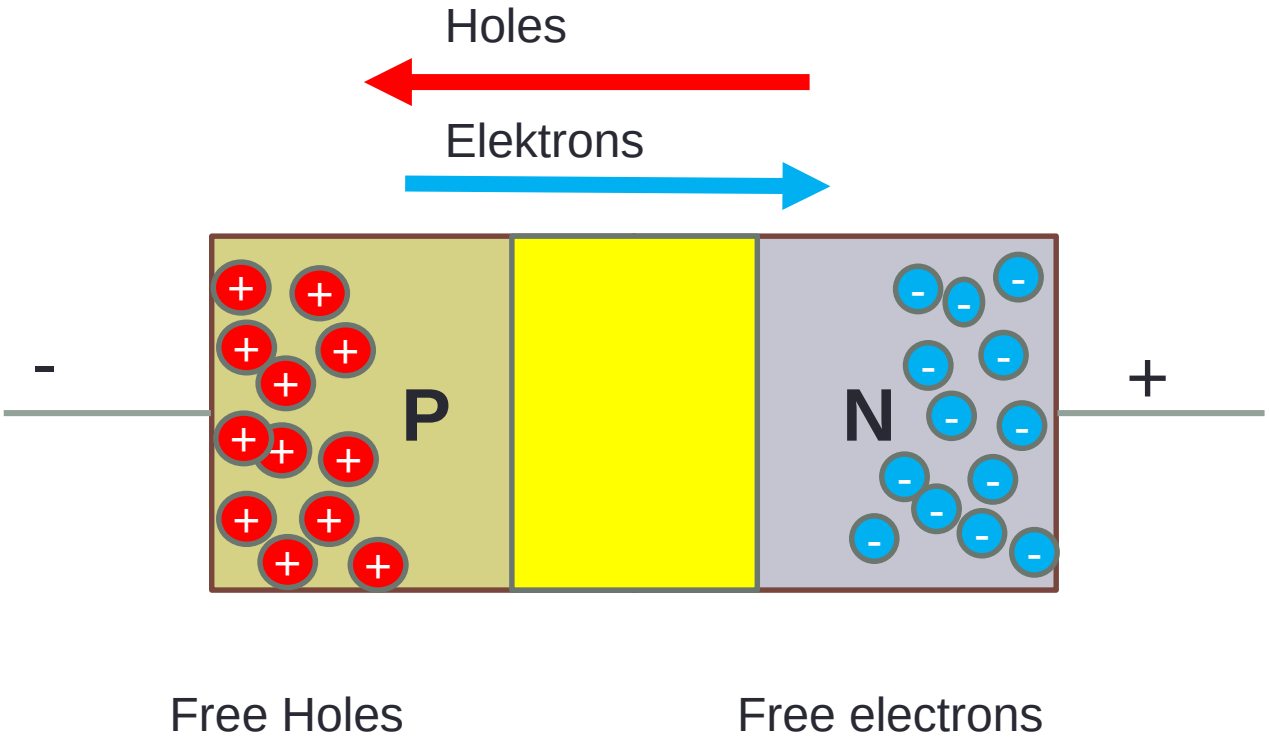

Forward biased p-n junction

- Barrier decreases, because charges are pulled to junction.
- From opening voltage (ex Si 0,6...0,7 V) arises current.

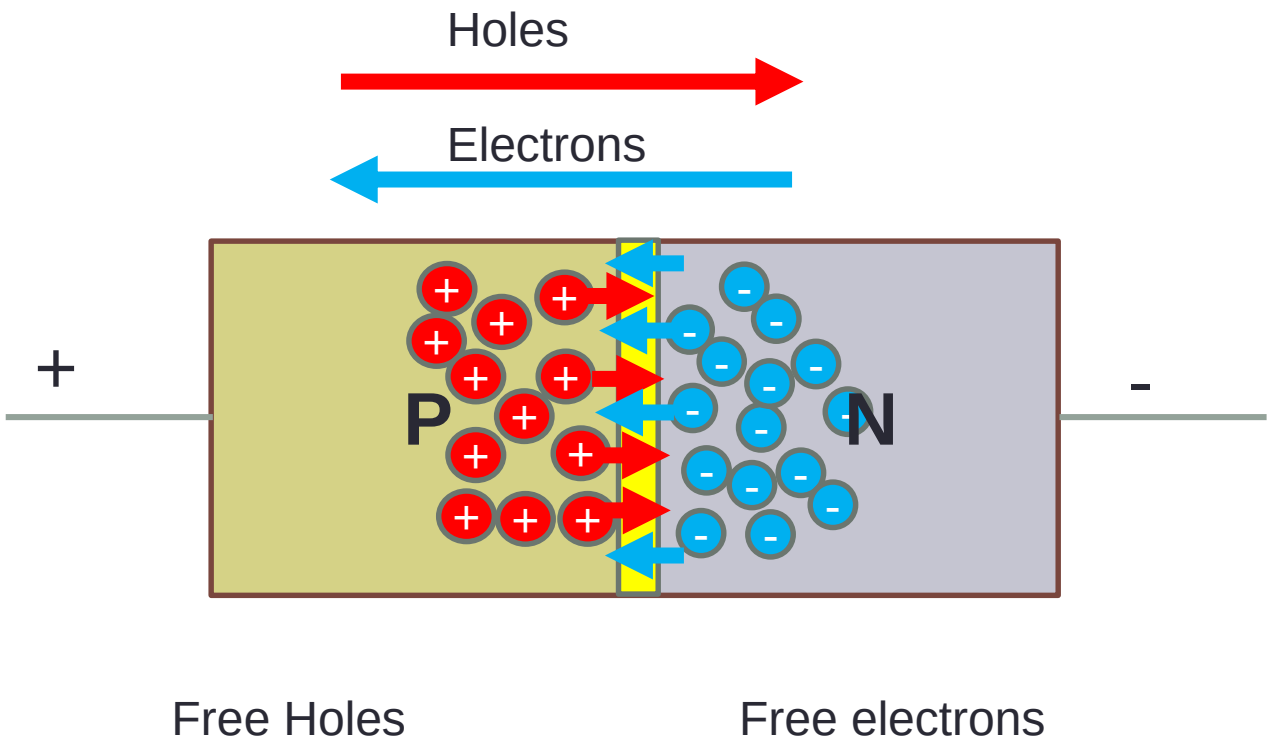

Electronic component - Diode

Nonlinear twopole

- Effect appears when materials with different properties contacting
- Usually p- and n- type materials (silicon, germanium, gallium arsenide) are used

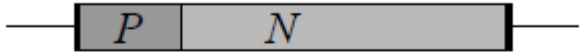

Anode Cathode

- Analogue in hydraulic– non-return valve

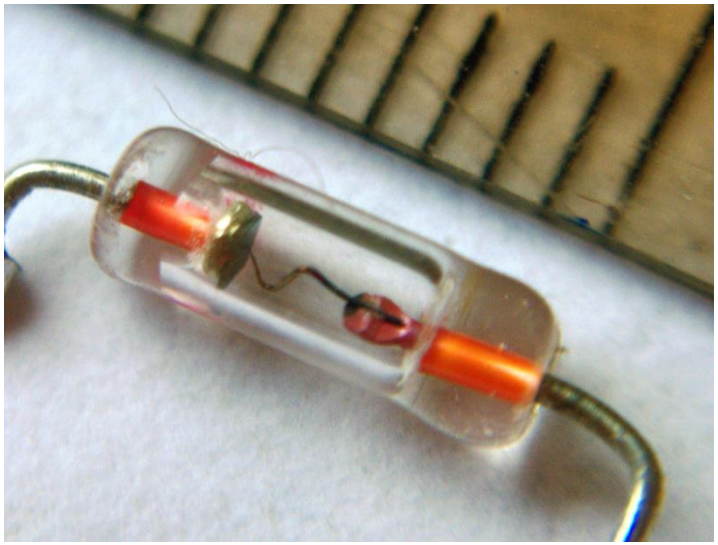

Electronic component - Diode

- Conductonce depends on voltage
- Main usage – to rectify AC signals

$$I = I_S \left(e^{\frac{V_D}{nV_T}} - 1 \right)$$

I is the diode current,
I_S is the reverse bias saturation current
,V_D is the voltage across the diode,
V_T is the thermal voltage

V-A characteristics

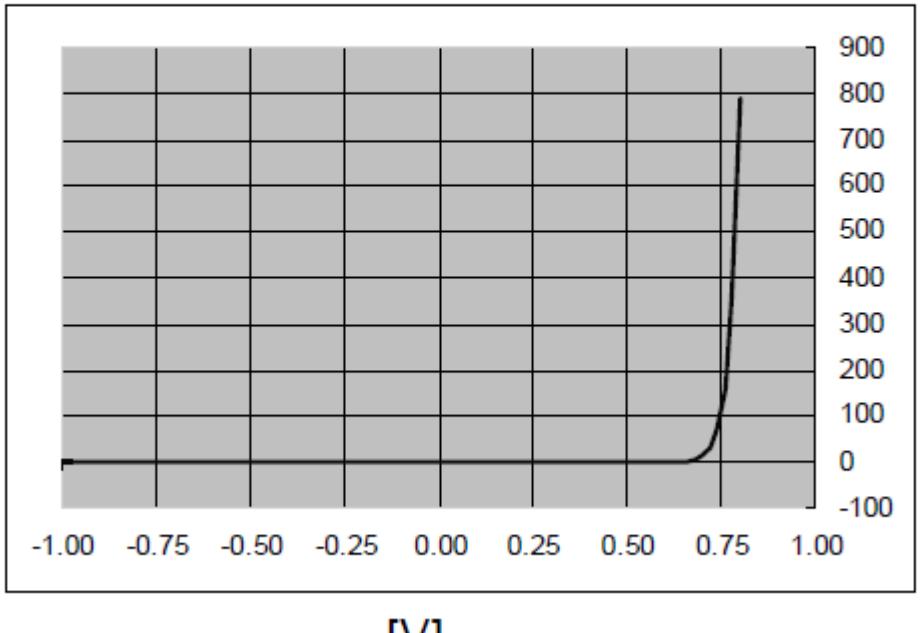

Thermal voltage

$$V_T = \frac{kT}{q}$$

approximately 25.85 mV at 300 K,
k is the Boltzmann constant
q is the elementary chargre

Electronic component - Diode

- Zener diode
- Light emitting diode , photodiode
- Tunnel diode
- Schottky diodes

Equivalent circuit of silicon diode

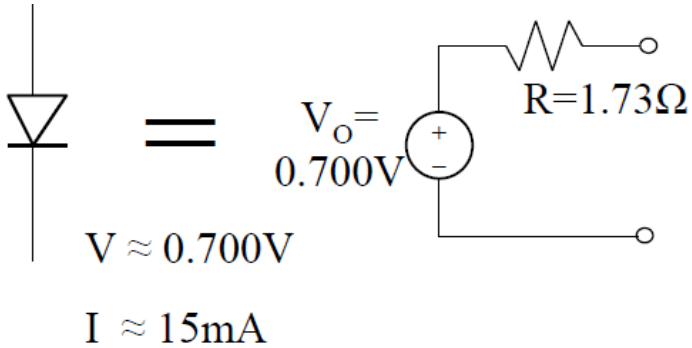

Päripingestatud diood on ligikaudu 0.7V pingeallikas!

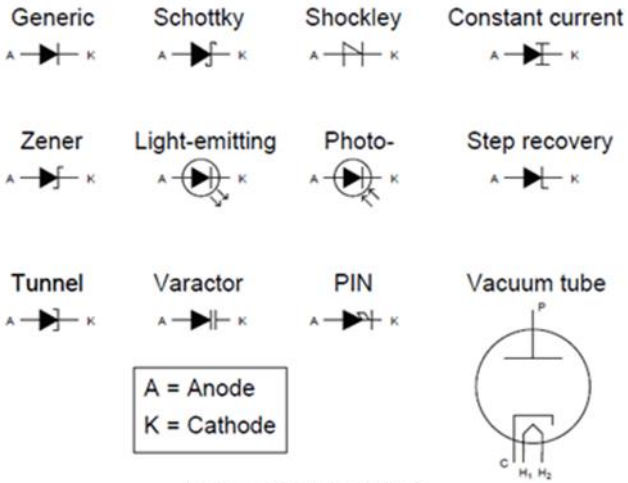

Various symbols of Diode

Image:wikipedia

Light emitting diode (LED)

Calculation of resistor

We use

- Kirchhoff s voltage law ,calculate $V_R=V_s-V_L$
- Ohm's law $R=V_R/I$

At 10 mA current

Infrared - 1.1 V
Red – 2 V
Yellow – 2.2 V
Green – 2.3V
Blue - 3.3 V
White - 3.3 V
Depends on material „bandcap-0.4 V „ rule.

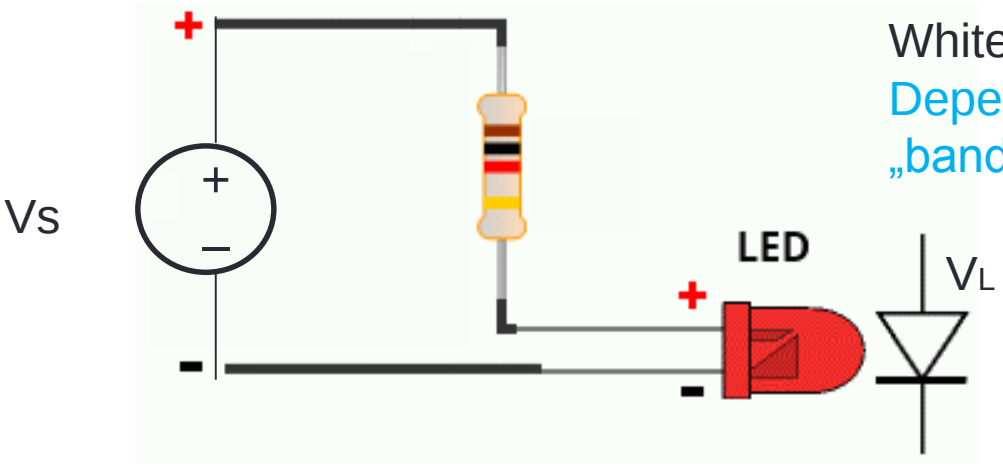

The average current in normal state 10-20 mA

Electronic component - Transistor

- It is electrically adjustable resistor(**tran**sformer of re**sistor**)
- Hydraulic analog– valve
- With little amount of energy the large energy flow can controlled
- Threepole

- Bipolar transistor
- Field effect transistor

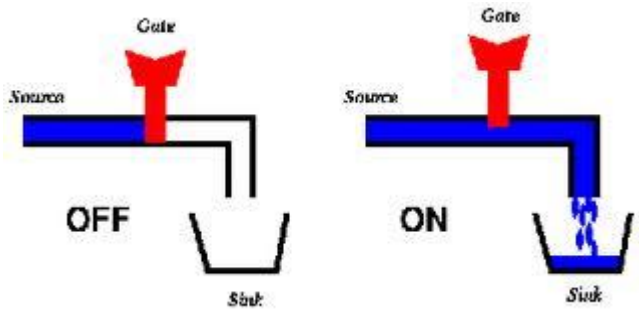

Field effect transistor

- Electric charge controls charge flow
- **Voltage** controlled resistor
- The most common part in microelectronics(IT)
- 50 million devices in year per person (USA 2001)
- Two channel types N or P
- Types MOSFET and J-FET
- https://www.youtube.com/watch?v=SjeK1nkiFvI

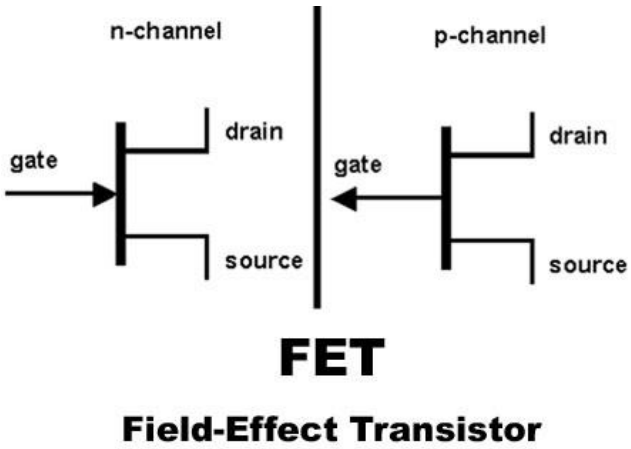

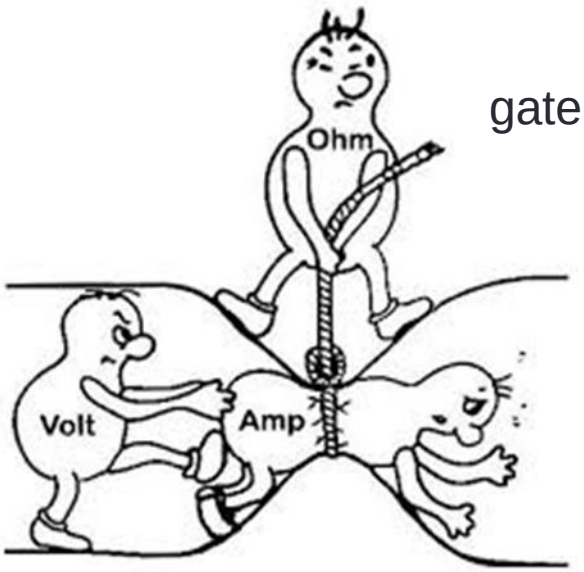

Image:Blog.novaelectronica.com

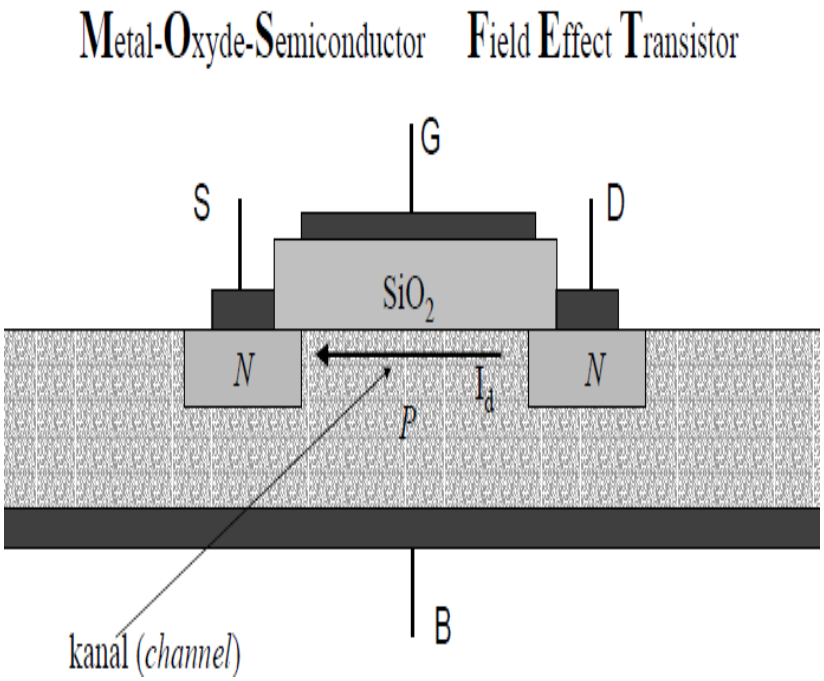

Field effect transistor

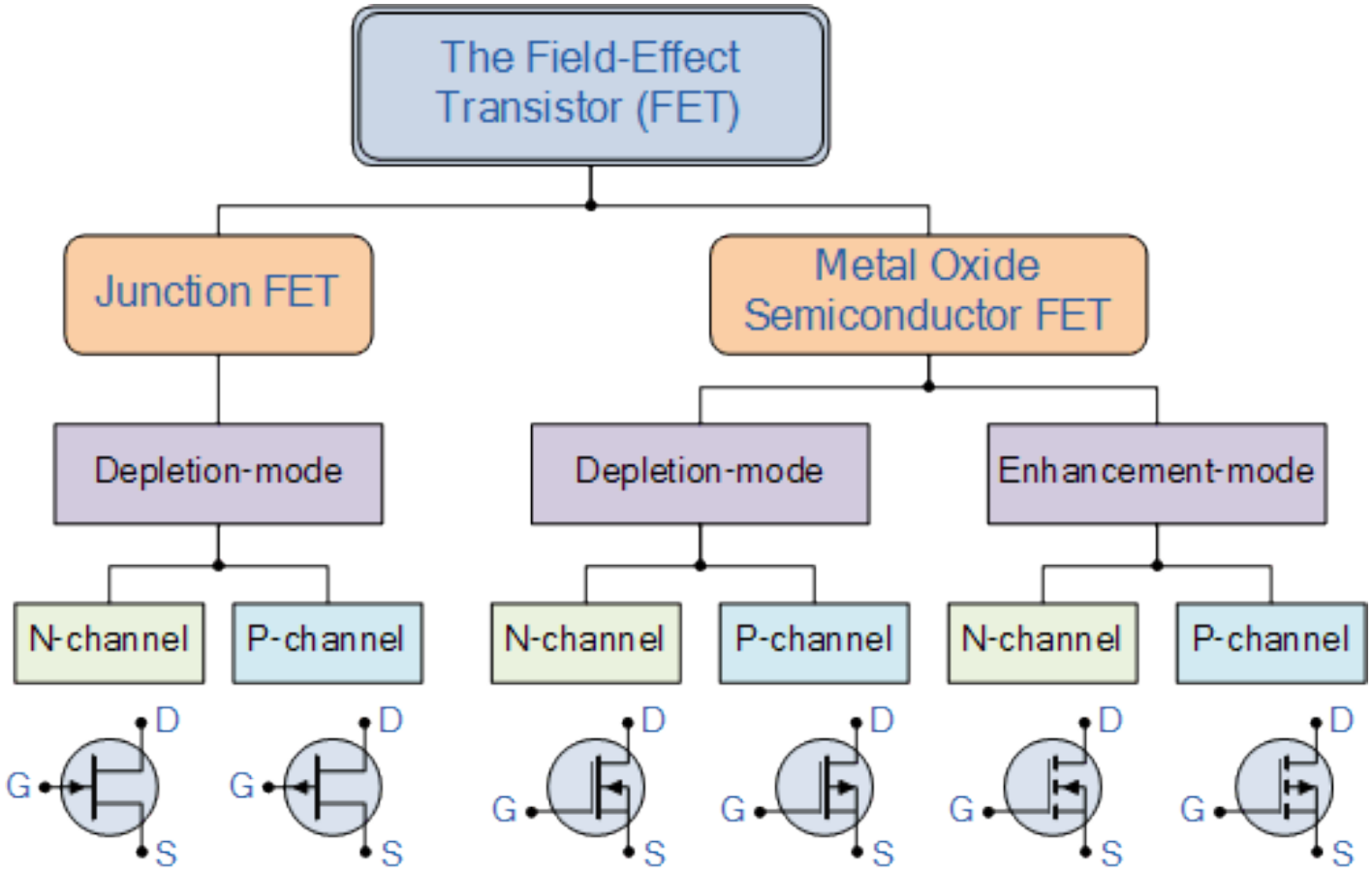

http://www.electronics-tutorials.ws

Field effect transistor application

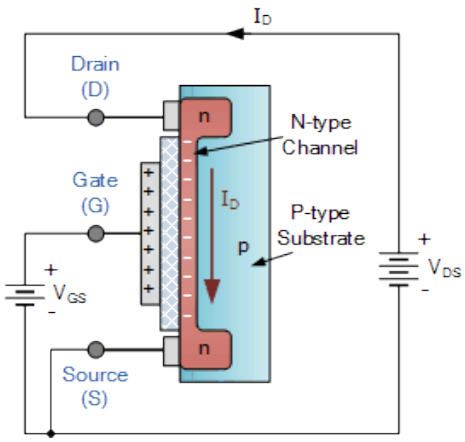

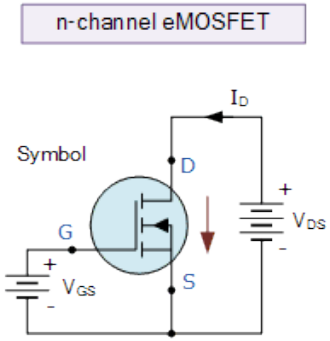

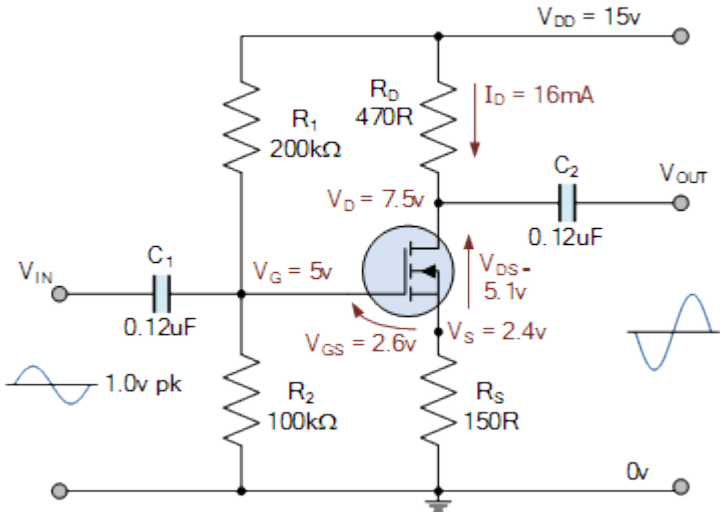

- Mosfet as an amplifier
- http://www.electronics-tutorials.ws/amplifier/mosfet-amplifier.html

Field effect transistor application

- MOSFET as switch (ex. for Arduino users)
- http://www.electronics-tutorials.ws/transistor/tran_7.html

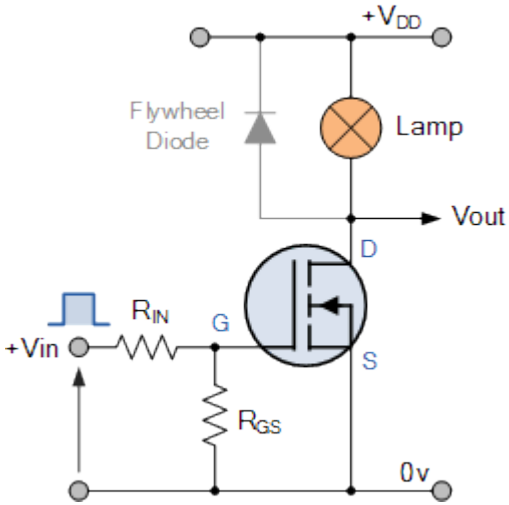

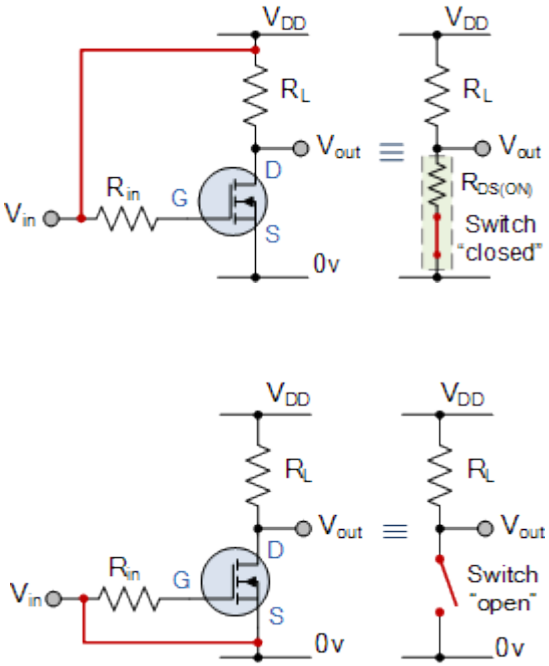

Bipolar transistor

- Two types PNP and NPN
- Can compared with diodes
- Current controlled resistor
- Most common in analogue electronics
- https://www.youtube.com/watch?v=7ukDKVHnac4

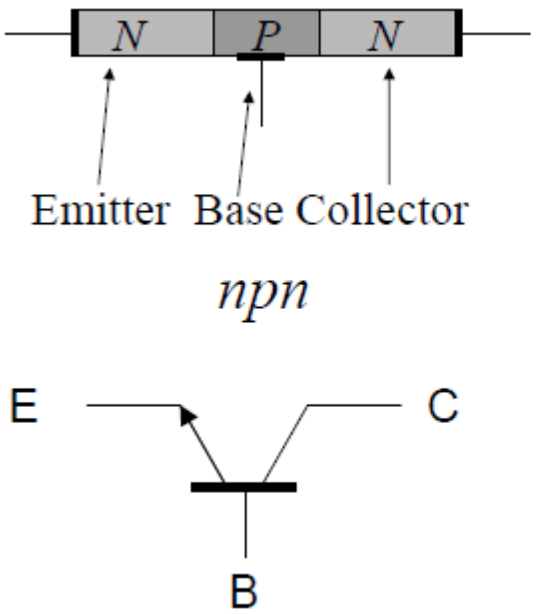

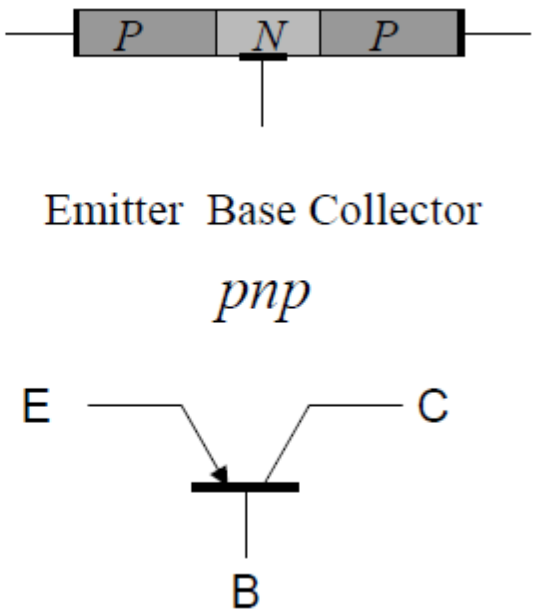

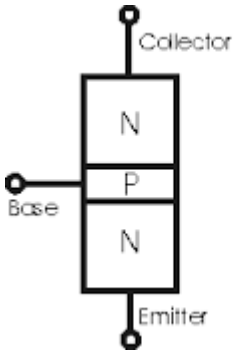

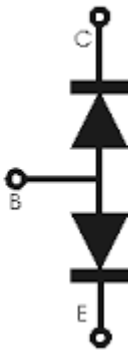

Bipolar transistor application

A Bipolar NPN Transistor Configuration
rrow defines the emitter and conventional current flow,
“out” for a Bipolar NPN Transistor.)

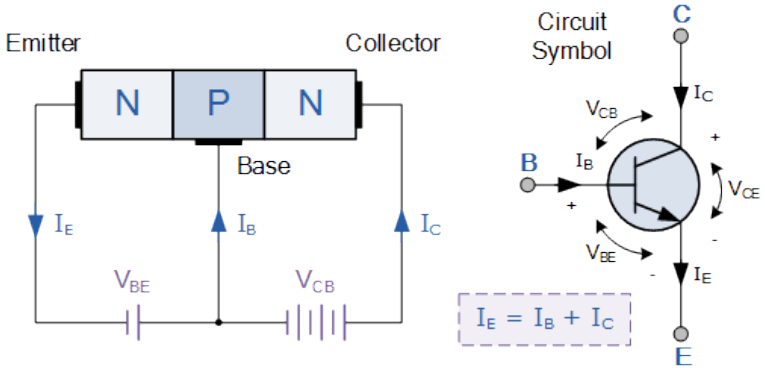

$$\text{DC Current Gain} = \frac{\text{Output Current}}{\text{Input Current}} = \frac{I_C}{I_B}$$

$$I_E = I_B + I_C \;\ldots\ldots\; (\text{KCL}) \quad \text{and} \quad \frac{I_C}{I_E} = \alpha$$

$$\text{Thus:} \quad I_B = I_E - I_C$$

$$I_B = I_E - \alpha I_E$$

$$I_B = I_E(1-\alpha)$$

$$\therefore \; \beta = \frac{I_C}{I_B} = \frac{I_C}{I_E(1-\alpha)} = \frac{\alpha}{1-\alpha}$$

$$\alpha = \frac{\beta}{\beta+1} \quad \text{or} \quad \alpha = \beta(1-\alpha)$$

$$\beta = \frac{\alpha}{1-\alpha} \quad \text{or} \quad \beta = \alpha(1+\beta)$$

$$\text{If} \quad \alpha = 0.99 \qquad \beta = \frac{0.99}{0.01} = 99$$

Bipolar transistor application

- Single Stage Common Emitter Amplifier Circuit

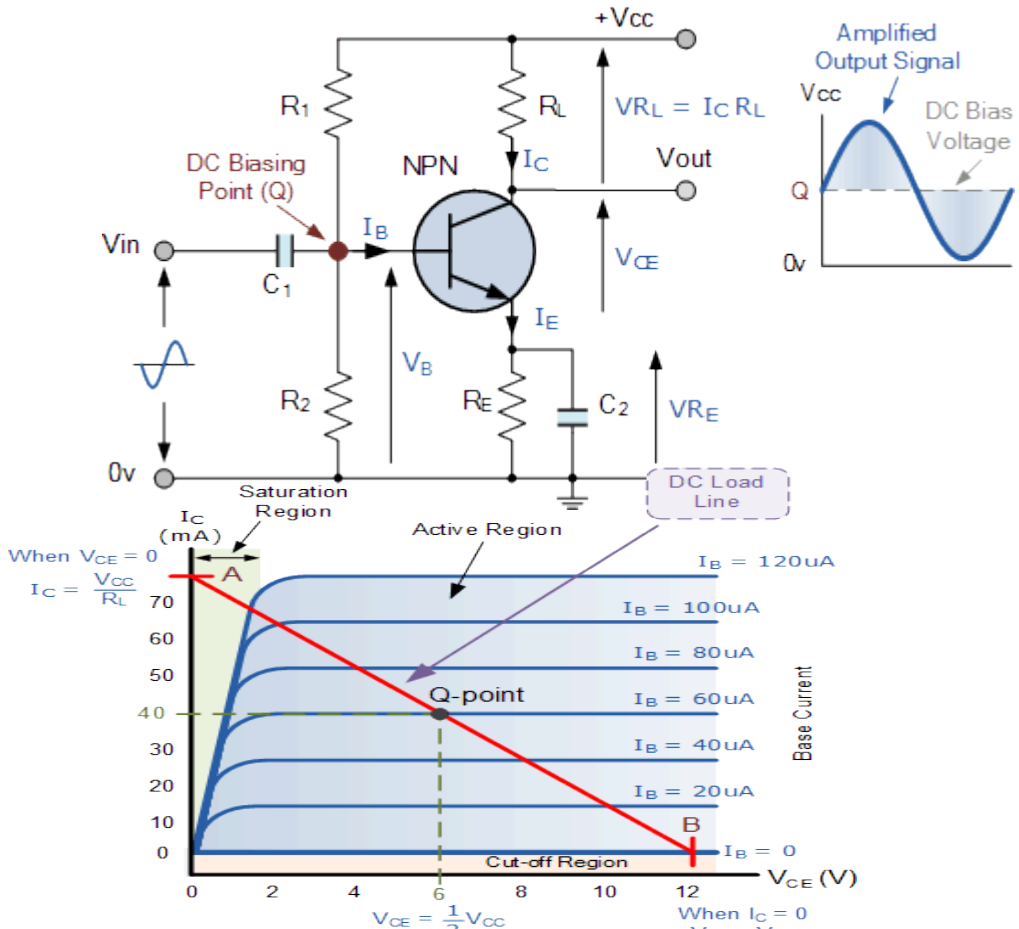

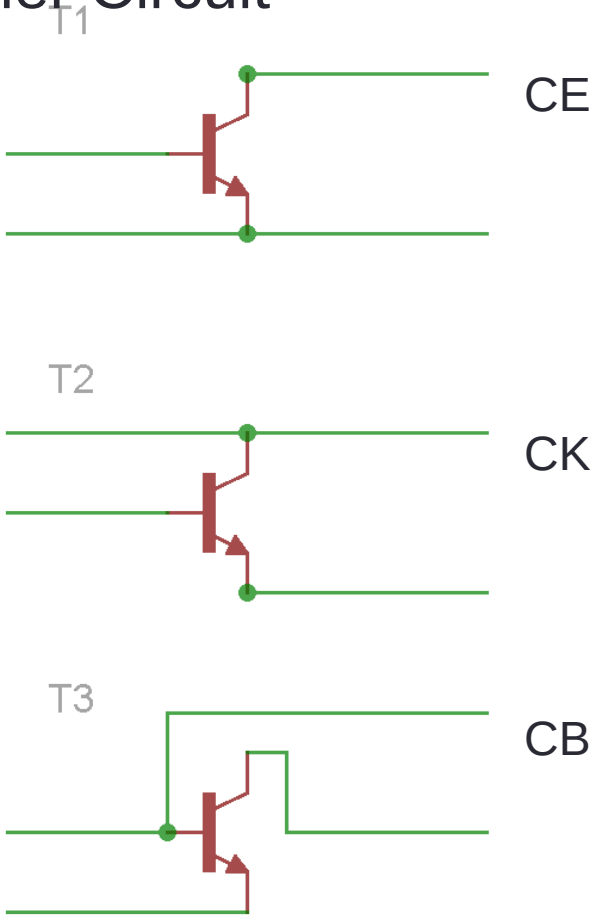

Bipolar transistor application

- Transistor as a switch

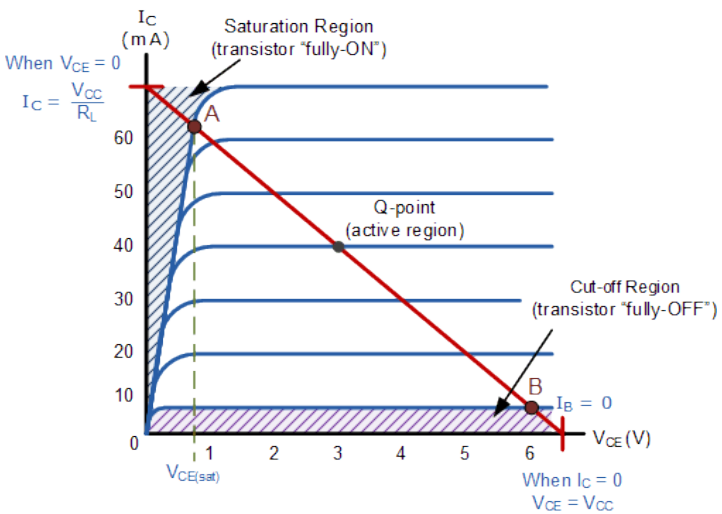

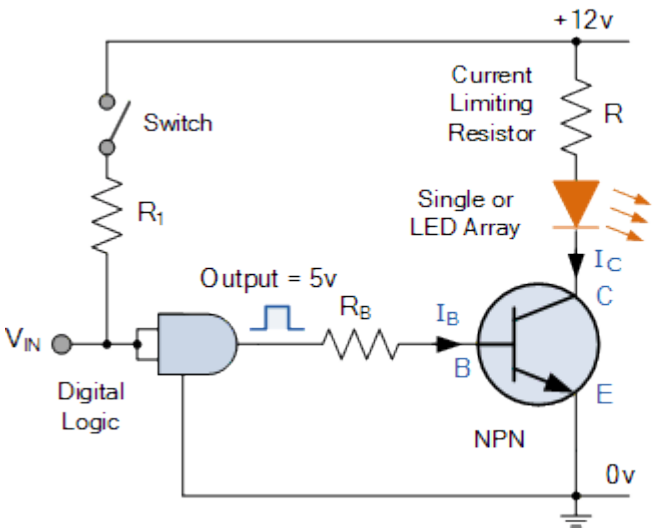

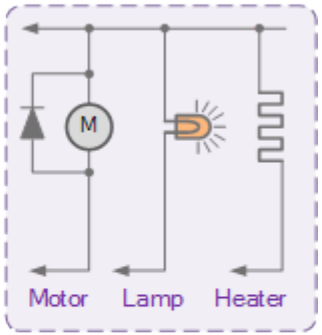

Different Collector Loads

Amplifier

An amplifier is an electronic device that can increase the power of a signal using power from supply.

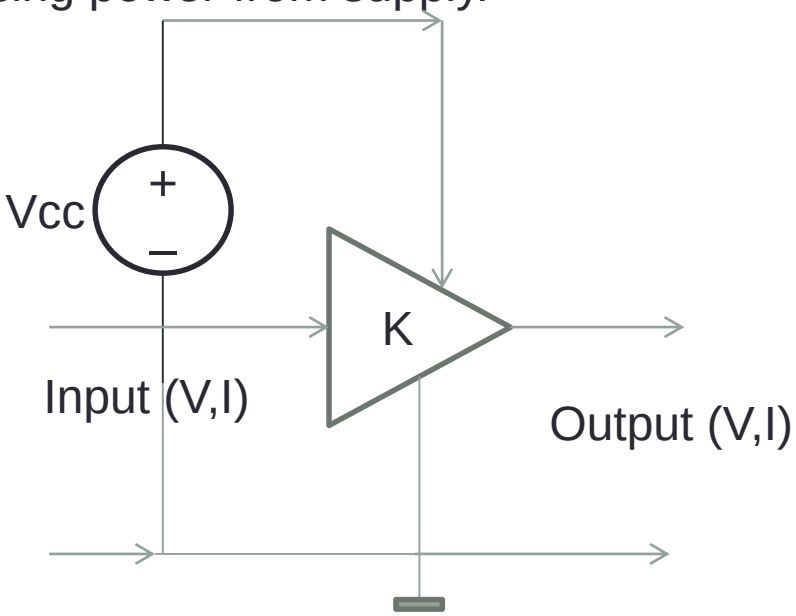

- Voltage amplifier
- Current amplifier
- V-I trancducer (transfer - conductivity)
- I-V trancducer (transfer -resistance)

Transfer (amplification)

$$K_V = \frac{V_{out}}{V_{in}} \ , \ K_V(\mathrm{dB}) = \mathbf{20} * \log(K_V)$$

$$K_I = \frac{I_{out}}{I_{in}} \ , \ K_I(\mathrm{dB}) = \mathbf{20} * \log(K_I)$$

K_V usually not = K_I

Power amplification

$$K_P = \frac{P_{out}}{P_{in}} \ , \ K_P(\mathrm{dB}) = 10 * \log(K_P)$$

Power is proportioonal with root of voltage (or current).

Operational amplifier

Amplifies only difference of input signal.

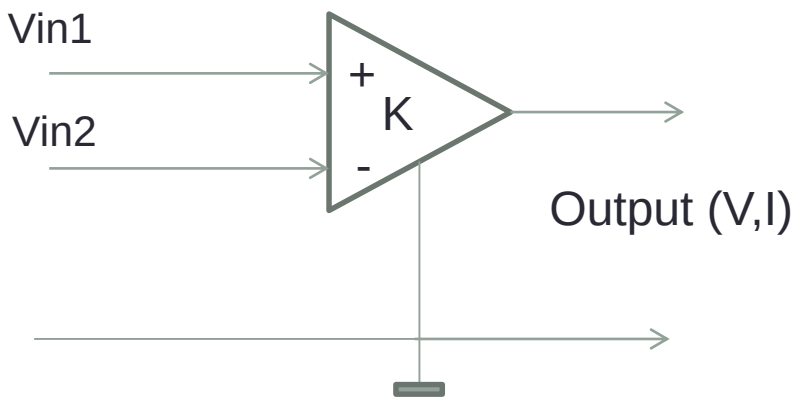

- K is very high(until 100 000)
- Instrumental amplifiers K selecable
- The most univesal device in electronics

- If negative feedback is used (V or I), output takes state that Vin1=Vin2 .

Output Voltage

$V_{out}=K*(Vin1-\mathrm{Vin2})$

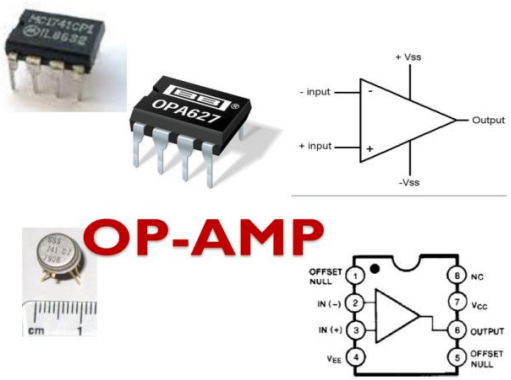

Usually opamps have voltage inputs (input resistance is very high).
Also there are opamps with current inputs (and differential outputs). Rarely used.

Operational amplifier

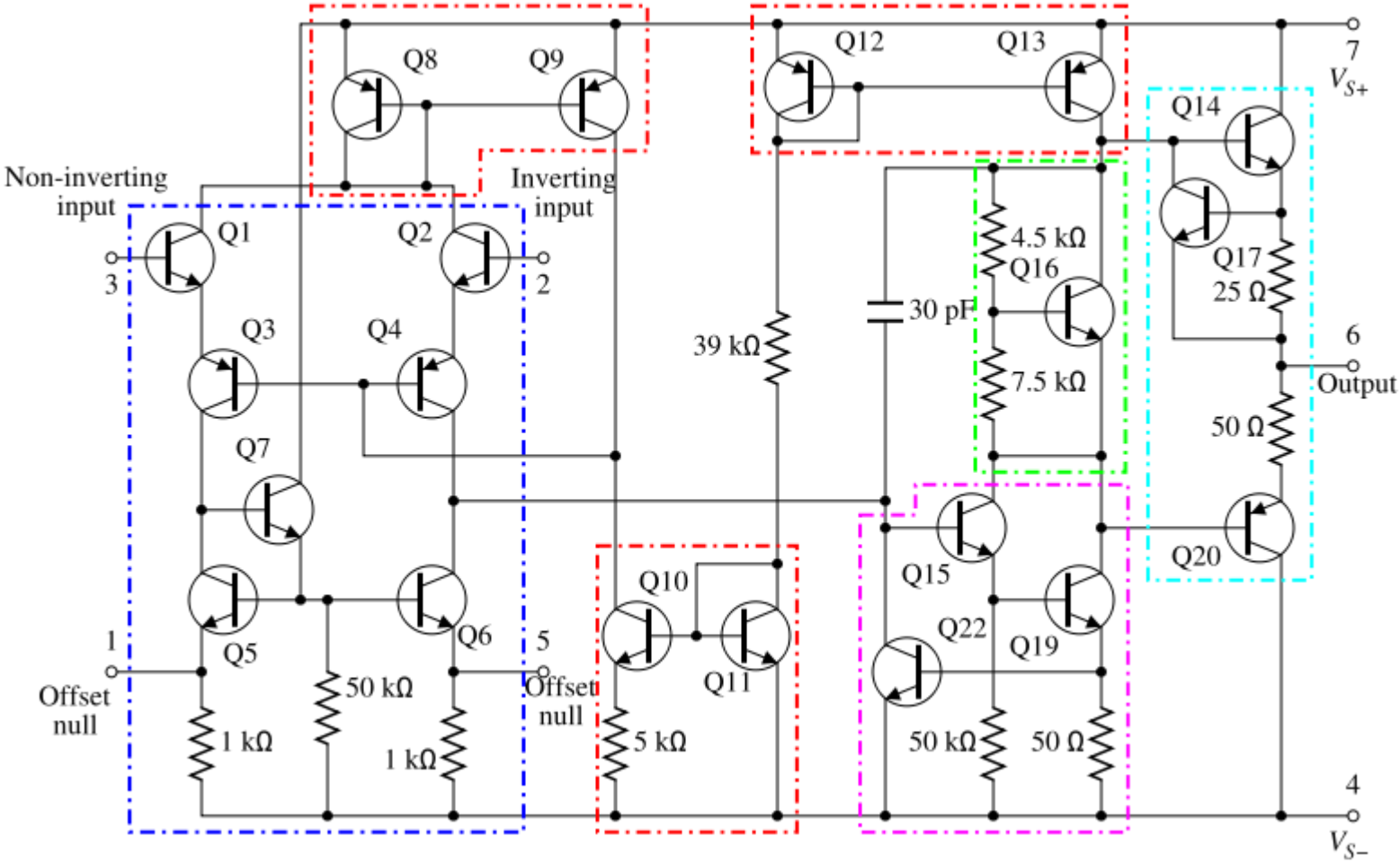

By Daniel Braun - redrawn png file (from User:Omegatron),Page# 4 of datasheet, CC BY 2.5, https://commons.wikimedia.org/w/index.php?curid=2205381

Feedback

The feedback is system's output effect to it's input.

- **Negative feedback** occurs when output of a system, process, or mechanism is fed back in a manner that tends to reduce the fluctuations in the output, whether caused by changes in the input or by other disturbances.

(stability,taxes , adjusting euribor)

- **Positive feedback** is a process that occurs in a feedback loop in which the effects of a small disturbance on a system include an increase in the magnitude of the perturbation.(unstability, generators, explosives, economics with credit).

By Lee Jordan - Flickr, CC BY-SA 2.0,

By Andy Docker from England - Stampede

Negative feedback

Example: steam engine

Images:wikipedia

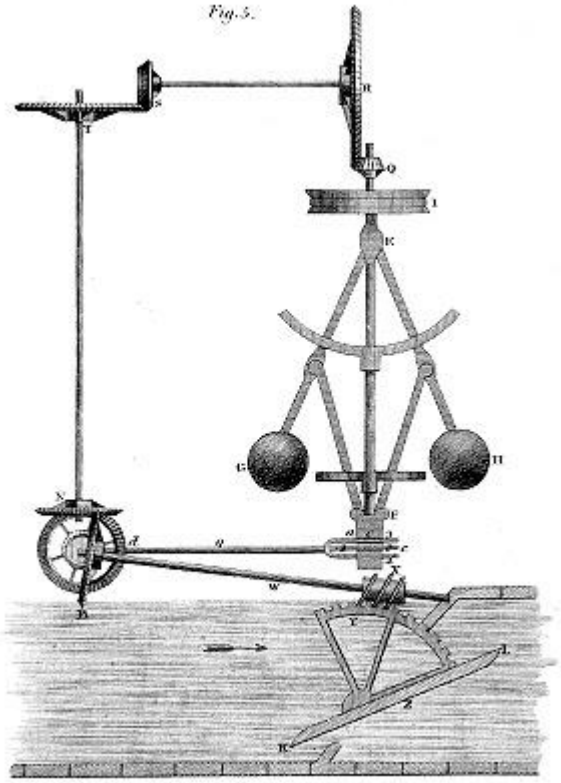

Mechanical feedback
Rotation speed stabilizer.

(Negative)Feedback

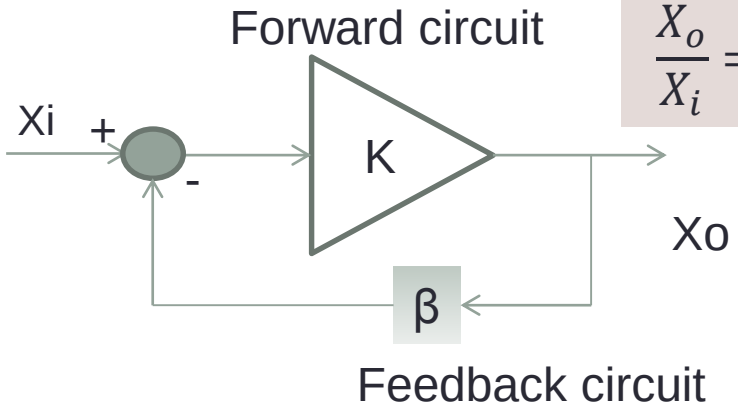

$$\frac{X_o}{X_i} = K_f = \frac{K}{1 + K\beta}$$

If Kβ >>1 then $K_f = \frac{1}{\beta}$

In forward circuit can be used cheap, unpercise components.
Feedback circuit must be percise !

The base of automation!

Operational amplifier

Non inverting amplifier

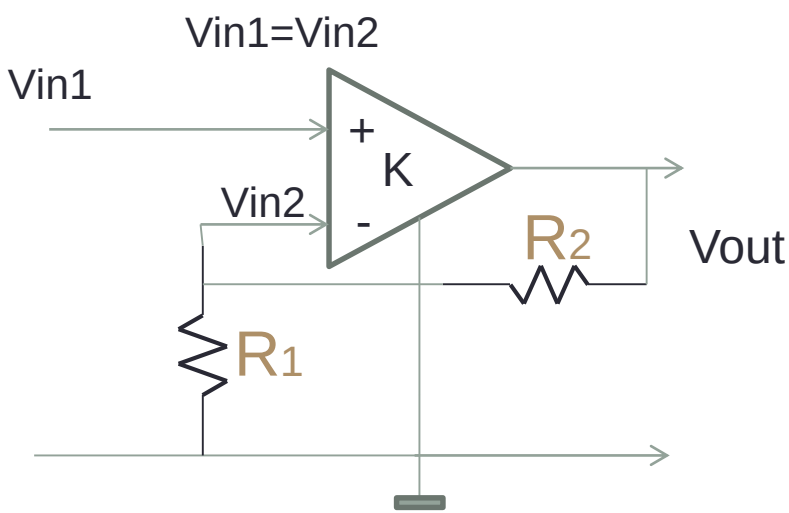

Output voltage

V_{out}=$K * (Vin1 - \mathrm{Vin2})$

Inverted inpud is connected
To output ,using voltage divider

$$Vin2 = Vout * \frac{R_1}{R_1 + R_2}$$

Putting them together.

$$V_{out} = K * (V_{in1} - V_{out} * \frac{R_1}{R_1+R_2}) \longrightarrow$$

$$V_{out} = V_{in1} * \frac{K}{1+K*\frac{R_1}{R_1+R_2}}$$

If Kβ >>1 then $K_f = \frac{1}{\beta} = \frac{R1+R2}{R1} = 1 + \frac{R2}{R1}$

Feedback (voltage divider) β

Operational amplifier

Inverting amplifier

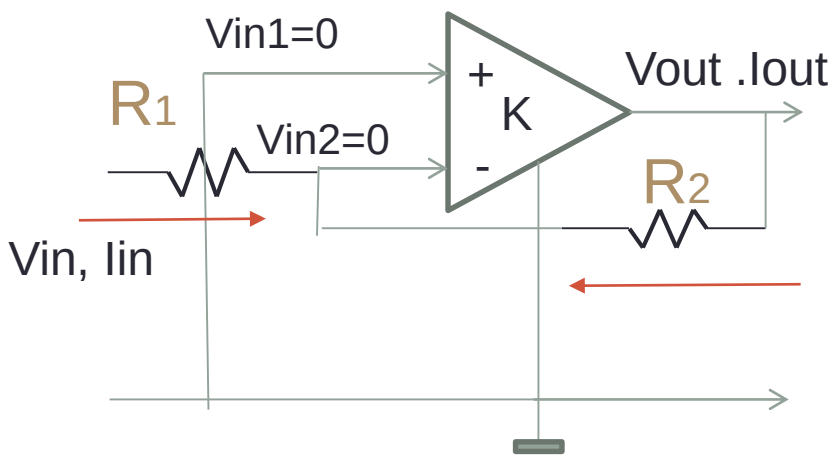

Opamp equals difference in input
Vin1=0 -> Vin2=0 K $\gg \infty$
Input Current
I_{in}=$Vin/\mathrm{R1}$
Output must compensate it
V_{out}=$R2 * -I_{in}$
Putting them together.

$$Vout = -Vin * \frac{R_2}{R_1}$$

$$K_f = -\frac{R2}{R1}$$

Operational amplifier

Summing inverting amplifier sums several voltages

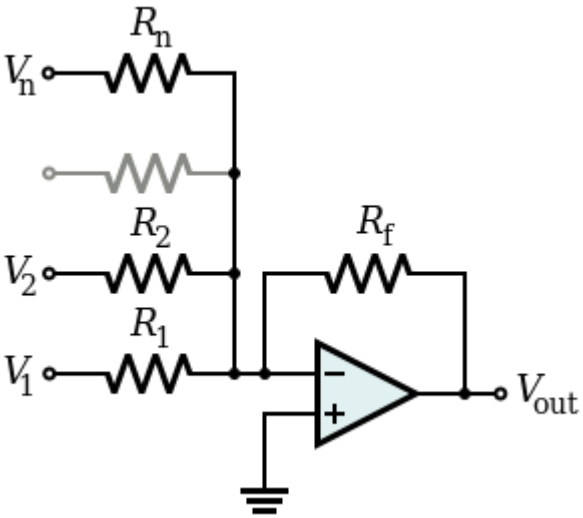

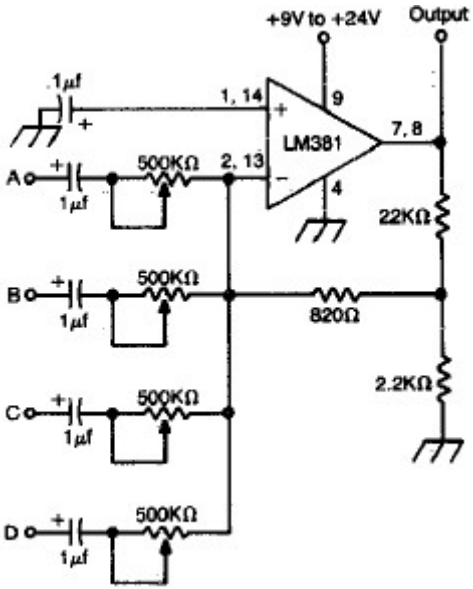

$$V_{out} = -R_f \left(\frac{V_1}{R_1} + \frac{V_2}{R_2} + \cdots + \frac{V_n}{R_n} \right)$$

4 channel audio mixer

http://www.electroniccircuitsdesign.com/audio-circuits/4-channel-audio-mixer-circuit-using-lm381.html

Operational amplifier

The circuit shown computes the difference of two voltages, multiplied by some gain factor.

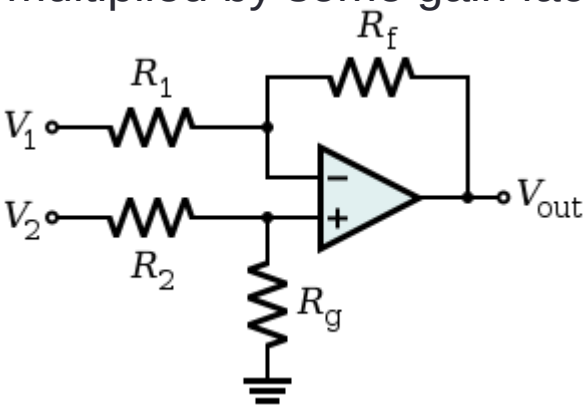

$$V_{\text{out}} = \frac{(R_{\text{f}} + R_1)\, R_{\text{g}}}{(R_{\text{g}} + R_2)\, R_1} V_2 - \frac{R_{\text{f}}}{R_1} V_1 = \left(\frac{R_1 + R_{\text{f}}}{R_1}\right) \cdot \left(\frac{R_{\text{g}}}{R_{\text{g}} + R_2}\right) V_2 - \frac{R_{\text{f}}}{R_1} V_1 .$$

Operational amplifier

Replacing resistors in previos circuits with other elemencs

It is possible to do everything in electronics.

- Filters
- Impedance converters
- Logaritmic or exponential amplifiers
- .....

Inductance gyrator

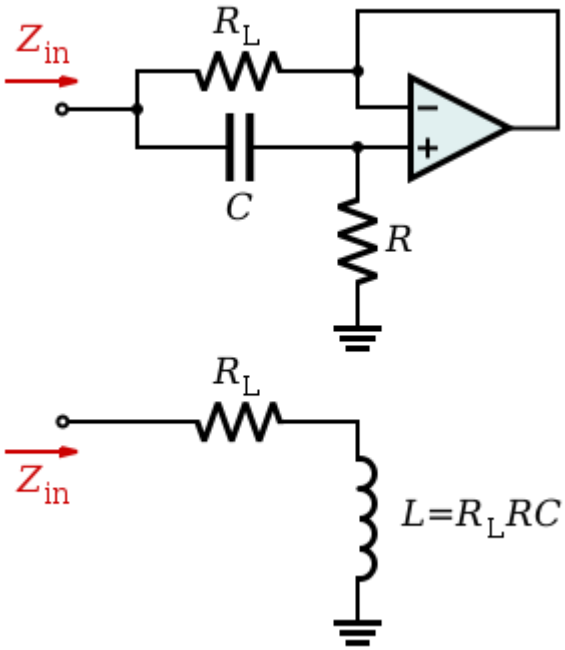

Integrator

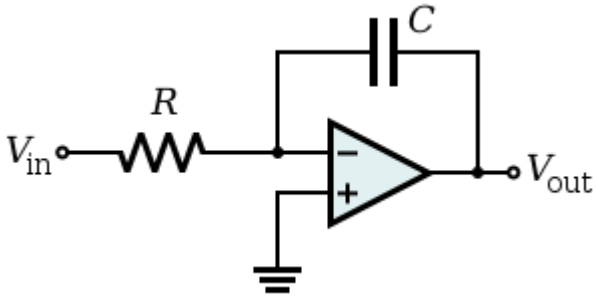

Operational amplifier

Comparator

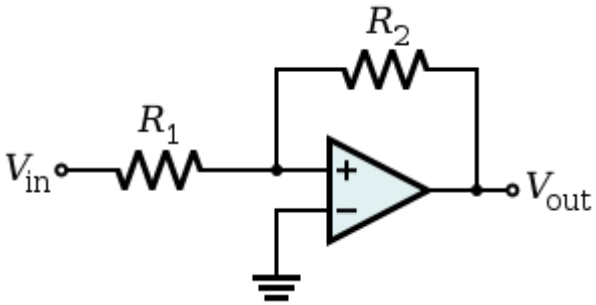

If positive feedback applied.

- Generators
- Comparators
- Negative impedance converter

Output is limited by supply voltage.

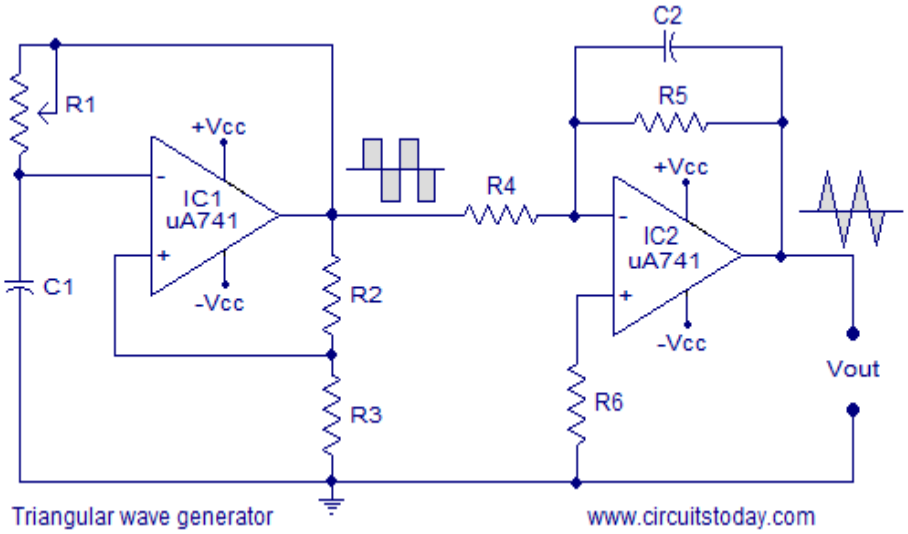

In a Schmitt trigger circuit, feedback to the non-inverting input of an amplifier pushes the output directly away from the applied voltage towards the maximum or minimum voltage the amplifier can generate.